Bulletin of the *Transilvania* University of Braşov • Vol. 2 (51) - 2009
Series I: Engineering Sciences

LIMITING PERFORMANCE OF RECTIFICATION AND MINIMAL ENTROPY PRODUCTION IN MASS TRANSFER

V. POPA[1] Al. ŞERBAN[2]

Abstract: *Rectification and separation processes generally operate far from their thermodynamically optimal conditions. Because the rectification process is one of the most widespread and energy-consuming processes of chemical technology, estimates of its limiting possibilities and the optimal profiles of concentrations that correspond to it are very important. In this paper we first find an estimate of the reversible rectification efficiency and the connection of this efficiency with entropy production. Then we derive the conditions on the profiles of concentrations that provide minimal irreversibility for a mass transfer process which has a specified intensity. Finally we determine an estimate of the limiting performance of the rectification process based on the results obtained.*

Keywords: *rectification column, entropy production, irreversibility mass and heat transfer.*

1. Introduction

The methods of finite-time thermodynamic have been applied to the analysis of processes of chemical technology in refs 1-6. These analyses take into account the irreversibility due to constraints of nonzero intensity of the processes and to the necessarily finite values of the coefficients of mass and heat transfer. Some of these have dealt primarily with heat transfer and others with chemical species and separation processes. The estimates of efficiency provided by these methods are more realistic than the reversible estimates. It is even more important that the analyses also give the conditions which show how to adjust the regime of the actual process in order to approach the limiting, maximal effectiveness. In many cases (absorption, desorption, membrane separation, rectification) the major irreversibility factor is the mass-transfer process. If mass transfer operates optimally, it minimizes the energy consumption when its intensity is fixed. Because the rectification process is one of the most widespread and energy-consuming processes of chemical technology, estimates of its limiting possibilities and the optimal profiles of concentrations that correspond to it are very important. In this article we first find an estimate of the reversible rectification efficiency and the connection of this efficiency with entropy production. Then we derive the conditions on the profiles of concentrations that provide minimal irreversibility for a mass transfer process

[1] Dept. of Thermodynamics and Thermal Machines, *Dunărea de Jos* University of Galați.
[2] S.C. CRIOMEC S.A. Galați.

which has a specified intensity. Finally we determine an estimate of the limiting performance of the rectification process based on the results obtained.

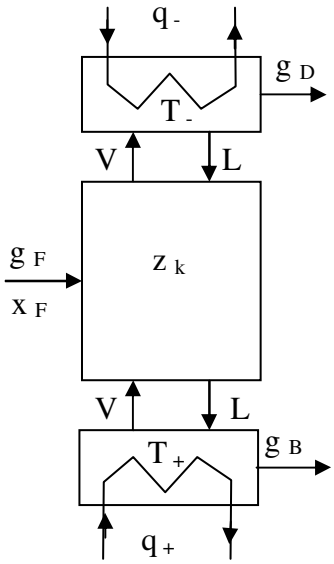

Fig.1. *Scheme of the rectification process*

2. Efficiency of Rectification and Entropy Production

2.1. Equations of Thermodynamic Balances.

The rectification process is shown schematically in Figure 1. The feed of mixture g_F with the (vector of) concentrations x_F flows into the section z_k of rectification column *K*.

The countercurrent fluxes of vapor V and liquid (phlegma) L are established inside the column. The vapor is enriched in the more volatile components and the liquid is enriched in less volatile components in a process of mass transfer. The flux of heat q_+ is added at the lower part of the column (the cube). Similarly, a flux of heat q_- is removed and the vapor condenses at the upper part of column (dephlegmator). The temperatures at the cube and dephlegmator are T_+ and T_-, respectively. g_B and g_D flow out of the cube and dephlegmators correspondingly. The first of these consists of the less and the second, of more volatile components of the mixture.

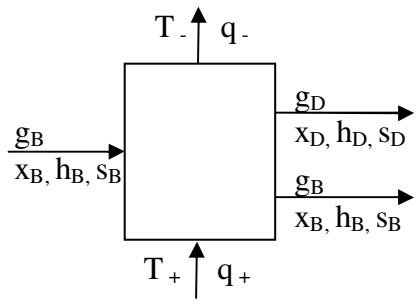

Fig.2. *Scheme of the input and output fluxes in the rectification column*

The thermodynamic balances (mass, energy and entropy) for the column with the fluxes shown in the Figure 2 have the form (1, 2, 3), where h_{ij}, s_{ij}, i = 1, ..., *k*, and $j = F, B, D$ are the molar enthalpies and entropies of the ith component of the jth flow; *k* is the number of components in the mixture; σ is the rate of entropy production. Using these balances, we express the heat used for the process as is shown in Eq.(4).

$$g_F x_{iF} - g_D x_{iD} - g_B x_{iB} = 0, i = 1,...,k \quad (1)$$

$$g_F h_{iF} - g_D h_D - g_B h_B + q_+ - q_- = 0 \quad (2)$$

$$g_F s_F - g_D s_D - g_B s_B + \frac{q_+}{T_+} - \frac{q_-}{T_-} + \sigma = 0 \quad (3)$$

$$q_+ = \frac{T_+}{T_+ - T_-}\left[g_D\left(h_D - s_D T_-\right) + g_B\left(h_B - s_B T_-\right) - g_F\left(h_F - s_F T_-\right)\right] + \\ + \sigma \frac{T_+ T_-}{T_+ - T_-} = q_0^+ + \sigma \frac{T_+ T_-}{T_+ - T_-} \quad (4)$$

Because the entropy production $\sigma \geq 0$ the reversible estimate of the heat consumption of the column is $q_+ \geq q_+^0$. Any estimate of $\sigma^* \leq \sigma$ caused by the given intensities of the processes and finite values of mass- and heat-transfer coefficients gives, after substitution into expression 4, a value of minimal heat consumption more realistic than q_0^+. It gives not only its dependence on the parameters of the external fluxes but on the kinetics of the processes inside the column as well.

2.2. Estimate of the Reversible Efficiency.

Let us give a more detailed form of the reversible estimate just obtained. Assume that (1) the pressures in the fluxes g_F, g_D, and g_B are the same and equal to p; (2) the mixtures can be described as ideal solutions.

Thus their enthalpies and entropies depend on parameters as:

$$h(T, p, x) = \sum_{i=1}^{k} x_i h_i(T, p)$$

$$s(T, p, x) = \sum_{i=1}^{k} x_i s_i(T, p) - R\sum_{i=1}^{k} x_i \ln x_i$$

here R is the universal gas constant. The increments of the enthalpy and entropy due to the change of the flux temperatures can be expressed in terms of the heat capacities $C_{pi}(T)$ at the constant pressure p. Thus:

$$\Delta h_i = h_i(T_2, p) - h_i(T_1, p) = \int_{T_1}^{T_2} c_{pi}(T)dT$$

$$\Delta s_i = s_i(T_2, p) - s_i(T_1, p) = \int_{T_1}^{T_2} \left(\frac{c_{pi}}{T}\right)(T)dT \quad (5)$$

If the temperature of the phase transition T_{i0} lies in the interval [T_1, T_2], then the terms $\delta h_{i0} = Q_{i0}$, $\delta s_{i0} = Q_{i0}/T_{i0}$ should be added to the right-hand sides of eqs *5*. Here Q_{i0} is the latent heat of phase transition of 1 mol of ith component. Taking all this into account and expressing g_F in terms of g_D and g_B, we get the following reversible estimate for heat consumption in the rectification process

$$q_+^0 = \frac{T_+}{T_+ - T_-} = \sum_{i=1}^{k}\left[g_D x_{iD}\left(\int_{T_D}^{T_F} c_{pi}(T)\left(\frac{T_-}{T_+}-1\right)dT + Q_{i0}\left(\frac{T_-}{T_+}-1\right)u_d(T_{i0})\right)+\right.$$
$$RT_-\left(g_B x_{iB}\ln x_{iB} + g_D x_{iD}\ln x_{iD} - g_F x_{iF}\ln x_{iF}\right)+ \tag{6}$$
$$\left.+\, g_B x_{iB}\left(\int_{T_F}^{T_B} c_{pi}(T)\left(1-\frac{T_-}{T}\right)dT + Q_{i0}\left(1-\frac{T_-}{T_{i0}}\right)u_d(T_{i0})\right)\right]$$

If the component i is transferred from the vapor into the liquid then the heat of evaporation $Q_{i0} > 0$. If it is transferred from liquid to vapor, then $Q_{i0} < 0$. The functions u_D and u_D are equal zero if the temperature of the phase transition does not fall in either of the intervals [T_D,T_F] and [T_B,T_F] correspondingly. Otherwise it is equal to 1.

3. Minimal Irreversibility of Mass Transfer

3.1. One-way Mass Transfer.

Assume that the system consists of two fluxes (Figure 3) and the objective (desired) component is transferred from one flux to the other. We also assume that the temperatures of both fluxes are the same in every section of the system. The problem of finding the regime of this process with minimal irreversibilities takes the form

$$\sigma = \int_0^L \frac{g(c_1,c_2)}{T(c_1,c_2)}\left(\mu_1(c_1,T) - \mu_2(c_2,T)\right)dl \to \min \tag{7}$$

subject to constraints

$$\int_0^L g(c_1,c_2)dl = N \tag{8}$$

$$dG_l / dl = -g(c_1,c_2), \quad G_l(0) = G_{l0} \tag{9}$$

$$d(G_1,c_1)/dl = dG_l / dl \tag{10}$$

where $G_l(l)$ is the total rate of the first flux; $c_i(l)$, $\mu_i(c_i,T)$ i = 1, 2 are concentrations of the objective component and its chemical potential in the ith flux; $T(c_1,c_2)$ is the temperature of the fluxes; N is the total amount of transferred material, L is the length of the contact surface, l is the coordinate along this surface, and $g(c_1,c_2)$ is the flux density of the mass flow from the first flux to the second (per unit length). Condition 10 expresses the fact that there is transfer of the objective component only between two fluxes. From (9) and (10) it follows that:

$$\frac{dc_1}{dl} = -\frac{1-c_1}{G_l}g(c_1,c_2), \quad c_1(0) = c_{10} \tag{11}$$

If $c_2(l)$ is given, then eqs *9* and 11 and the boundary conditions (for instance, $c_1(l)$ and $G_1(l)$) define $c_l(l)$ and $G_l(l)$. Thus we can consider the concentration $c_2(l)$ as a control variable of the problem.

Such one-way mass transfer occurs in the processes of absorption, adsorption, membrane separation, and drying. But the

temperatures of the fluxes are not always the same at every section of the system and mass transfer does not occur simultaneously with heat transfer. Let us use the concentration c_l as a new independent variable instead of the distance *l*. From (11) we get:

$$dl = dc_l \frac{G_l}{(1-c_l)g(c_1,c_2)} \tag{12}$$

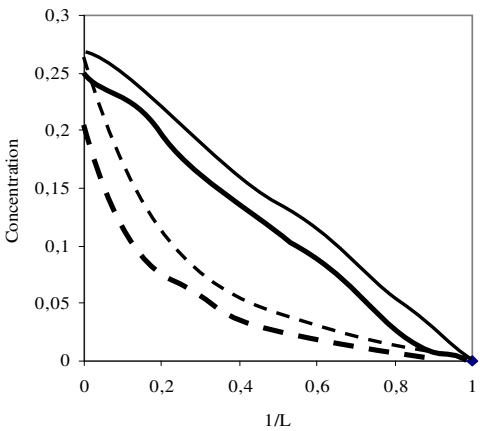

Fig. 3. *Optimal (solid line) and real (dashed line) concentration's profiles in the lower part of the rectification column*

Condition 8 can be rewritten as

$$\int_{c_l(L)}^{c_{l0}} \frac{G_l(c_l)}{1-c_l} \tag{8a}$$

and equation 9 as

$$\frac{dG_l}{dc_l} = \frac{G_l}{1-c_l} \tag{13}$$

$$G_l(c_l) = G_{l0}\frac{1-c_{l0}}{1-c_l} = \frac{\tilde{G}_l}{1-c_l} \tag{13a}$$

where $\tilde{G}_l = G_{l0}(1-c_{l0})$ is the flux of inert components in the stream. The mass balance constraint on the objective component gives

$$G_{l0}c_{l0} - \tilde{g} = G_l(L)c_l(L)$$

and taking into account the dependence of G_l on c_l, we get

$$c_l(L) = \frac{G_{l0}c_{l0}}{G_{l0}-N} \tag{14}$$

Substitution of (12) into (7) leads to the transformed problem

$$\sigma = \int_{c_l(L)}^{c_{l0}} \frac{\tilde{G}_l}{T(c_1,c_2)(1-c_l)^2}\mu_T dc_l$$
$$\mu_T = [\mu_1(c_1,T) - \mu_2(c_2,T)] \tag{15}$$
$$\sigma \to \min$$

subject to the condition

$$\int_{c_l(L)}^{c_{l0}} \frac{\tilde{G}_l}{T(c_1,c_2)(1-c_l)^2} dc_l = L \tag{16}$$

The Lagrange function of this problem takes the form

$$M = \frac{\tilde{G}_l}{(1-c_l)^2}\left[\frac{1}{g(c_1,c_2)}\mu_T + \frac{m}{g(c_1,c_2)}\right]$$

Here is a Lagrange multiplier. The stationary condition of M with respect to c_2 gives the condition of minimal entropy production of one-way mass transfer

$$\frac{\partial T}{\partial c_2}\frac{1}{T}\left(\frac{\partial(\mu_1-\mu_2)}{\partial T}-\frac{(\mu_1-\mu_2)}{T}\right)-\frac{1}{T}\frac{\partial\mu_2}{\partial c_2}=m\left(\frac{\partial g}{\partial c_2}\right)\frac{1}{g^2} \quad (17)$$

If the chemical potential is

$$\mu_i(c_i)=\mu_0(p,T)+RT\ln c_i, \quad i=1,2 \quad (18)$$

then $\partial\mu_2/\partial c_2 = RT/c_2$ and condition 17 takes the form

$$-\frac{R}{c_2}=m\left(\frac{\partial g}{\partial c_2}\right)\frac{1}{g^2} \quad (17a)$$

This expression defines the optimal dependence $c*_2(m,c_1)$ up to constant *m*. Substitution of c_2^* into (16) gives the equation which defines $m=m*$. Finally, substitution of $c_2^*(m*,c_1)$ into (15) gives the minimal entropy production $\sigma*$ and into (11) gives the differential equation for $c_l(l)$

$$\frac{dc_l}{dl}=-\frac{(1-c_l)^2}{\tilde{G}}g\left(c_1,c_2^*(c_1)\right), \quad c_l(0)=c_{l0} \quad (19)$$

The solution of (19) gives the optimal profile of concentrations $c_1^*(l)$ and $c_2^*(l)=c_2^*\left(m*,c_1^*(l)\right)$.

5. Entropy Production in Irreversible Rectification

We assume that the feed flux g_F enters the rectification column in a section where the liquid composition and its temperature in the column are the same as those of the feed. The same is assumed for the fluxes L and g_B. Thus our model here supposes no excess entropy production due to mixture of the fluxes. We assume also that the amounts of mass N_i and heat Q transferred inside the column are fixed:

$$N_i=\int_0^{z_k} n_i dz = L(z_k)x_i(z_k)-L(0)x_i(0)+g_{F_x}x_{F_i}, \quad i=1,...,k \quad (62)$$

$$Q=\int_0^{z_k} q dz = L(z_k)h_x(z_k)-L(0)h_x(0)+g_{F_x}h_{F_x}, \quad i=1,...,k \quad (63)$$

where L is the flux of liquid inside column, h_x is the enthalpy of this flux, h_{Fx} is the enthalpy of the feed, and g_{Fx} is the flux of liquid feed.

It is assumed that the kinetics of the heat and mass transfer is described by Onsanger's equations 50 and *51* with constant coefficients. If the processes occur near equilibrium this is valid. As has been shown above, the minimum of σ corresponds to constant heat and mass fluxes along the length of column

$$n*_i = N_i/z_k, \; q*_i = Q/z_k, \; i=1,...,k \quad (64)$$

The corresponding estimate of σ is

$$\sigma* = y*^T A^{-1} y*, \quad y*^T = (n*_1,...,n*_k,q*) \quad (65)$$

The mass and energy balance for the column are:

$$L(0)-V(0)=g_B,\quad V(z_k)-L(z_k)=g_D \tag{66}$$

$$L(z_k)h_x(z_k)+V(0)h_v(0)-V(z_k)h_v(z_k)-L(0)h_x(0)=-g_F h_F \tag{67}$$

where subscript x corresponds to the enthalpy of the liquid flux and v to the vapor flux:

$$h_F=h_{Fx}+h_{Fv},\quad g_F=g_{Fx}+g_{Fv}$$

Let us express the $L(z_k)$ in terms of $L(0)$ and substitute it into (66). We get

$$\sigma^*=(c'L(0)+c'')^T A^{-1}(c'L(0)+c'') \tag{68}$$

where c' and c'' are vectors that depend on the parameters of feed and the fluxes of liquid and vapor in the lower and upper sections of column:

$$c'^T=\begin{pmatrix}\dfrac{h_v(0)-h_x(0)}{h_v(z_k)-h_x(z_k)}-x_l(0),.\\ .....\\ ..,\dfrac{h_v(0)-h_x(0)}{h_v(z_k)-h_x(z_k)}-h_x(0)\end{pmatrix}$$

$$c''^T=\begin{pmatrix}\dfrac{g_F h_F-g_B h_v(0)-g_D h_v(z_k)}{h_v(z_k)-h_x(z_k)}x_l(z_k)+g_{Fx}x_{Fl},..\\ .....\\ .,\dfrac{g_F h_F-g_B h_v(0)-g_D h_v(z_k)}{h_v(z_k)-h_x(z_k)}h_x(z_k)+g_{Fx}x_{Fx}\end{pmatrix}$$

After minimization of σ^* with respect to $L(0)$, we get

$$\sigma^*=\frac{1}{z_k}\left[c''^T A^{-1}c''-\frac{\left(c'^T A^{-1}c''\right)^2}{c'^T A^{-1}c'}\right] \tag{69}$$

using the experimental data then we can calculate vectors c' and c'' using the parameters of fluxes in the sections o and z_k and get the σ^*. We can also obtain the estimation of the minimal heat consumption q_+ using (4).

6. Conclusions

Beginning with the reversible limit of rectification, we have analyzed the conditions for minimal entropy production for rectifying systems constrained to operate at fixed rates or to yield fixed fluxes of product. The case of one-way mass transfer is analyzed. The next step in this line of study would naturally be the

application of these analyses to the design and optimization of new rectification processes, for purposes of making them as efficient as is practically possible.

References

1. MBnsson, B. A. G.; Andresen, B. *Optimal Temperature Profile for an Ammonia Reactor*. In: *Contributions to Physical Resource Theory*; MAnsson, B. A. G., Ed.; Chalmers University of Technology: Goteborg, 1985.
2. Mullins, 0.; Berry, R. S. J. Phys. Chem. 1984, 8, 723.
3. Hoffmann, K. H.; Watowich, S. J.; Berry, R. S. J. Appl. Phys. 1983, 58, 365 1.
4. Bejan, A. ASME J. *Heat Transfer* 1978, 100, 708.
5. Bejan, A. Znt. J. *Heat Mass Transfer* 1991, 34, 407.
6. Tsirlin, A. M. Zzu. ANSSSR, Ser. Tekch. Ciber. 1991, 2, 171
7. Tsirlin. A. M. *Optimal cycles and cycle regimes;* Moscow: Ener-
8. Curzon, F. L.; Ahlborn, B. Am. J. Phys. 1975,43,22.
9. Andresen, B.; Salamon, P.; Berry, R. S. J. Chem. Phys. 1977, 66,
10. Rubin, M. H. Phys. Rev. A 1979, 19, 1272.
11. Salamon, P.; Nitzan, A.; Andresen, B.; Berry, R. S. Phys. Reu.